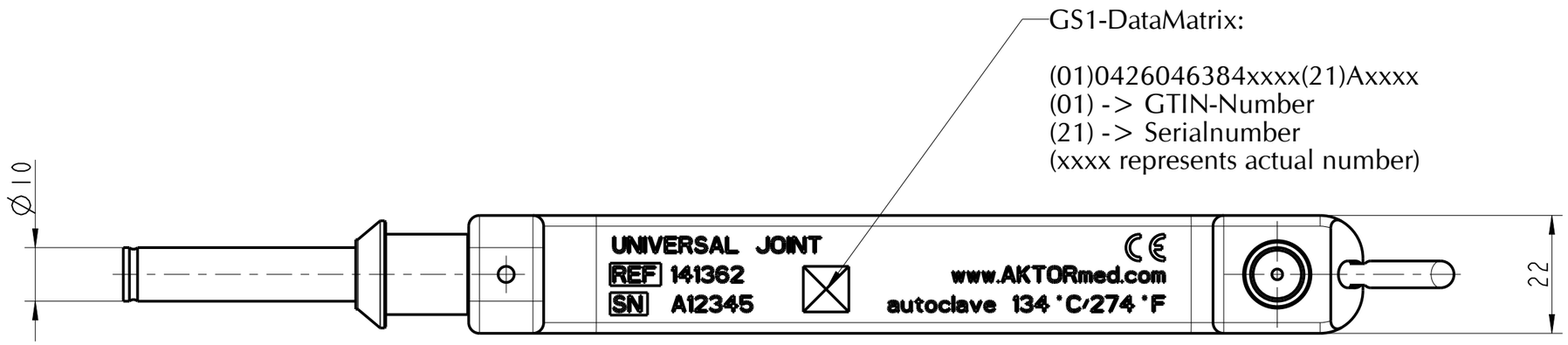

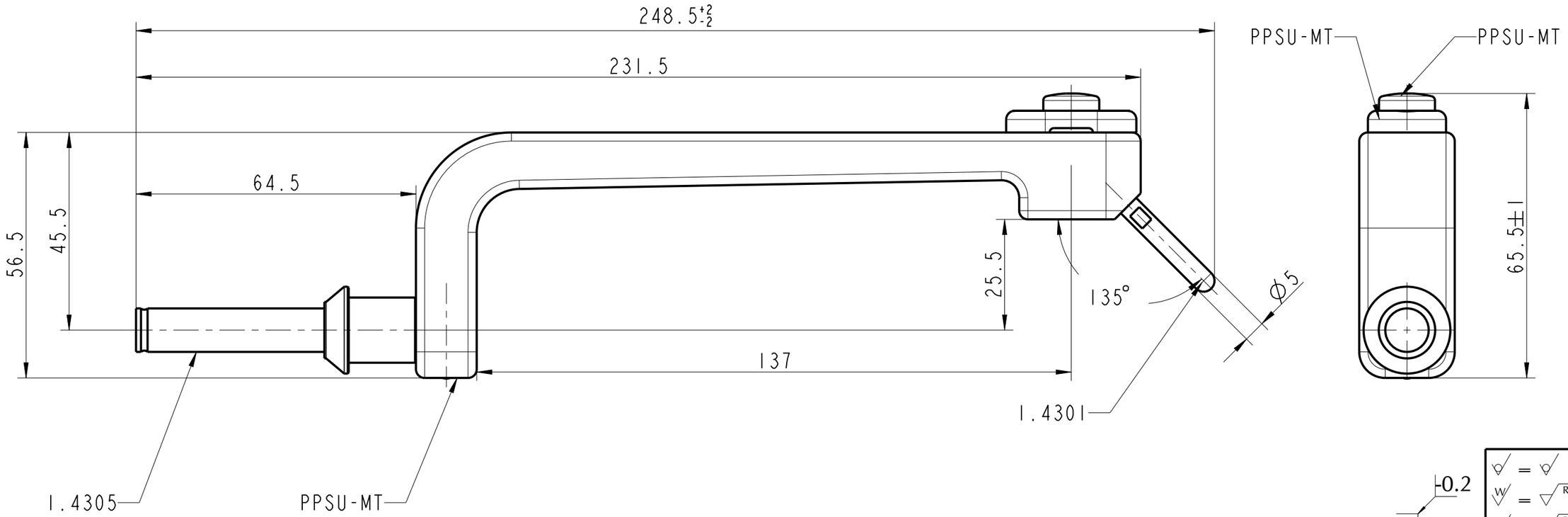

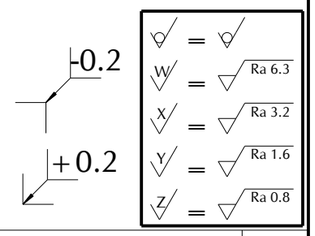

Universal Joint
Ref #:141362
autoclavable, max 134°C
life time > 500 cycles

Pro/E drawing - do not change				
Tolerances DIN ISO 2768-mk	scale: 1:1	Material: - -	Part number: 1206-36000-10	State
	weight: 0.147 kg			
	Date / Name	Part Name: Kardangelenk	AKTORmed™ ROBOTIC SURGERY	
	drawn: 12.12.2023 AZ			
	chkd:			
Surface:				
	Proprietary data, company confidential. All rights reserved.	page:2 of:2		

Size: A3 | 1:1 | Drawing: 1206-36000_KARDANGELENK | Model: 1206-36000_KARDANGELENK